1005
1/2" RATCHET WRENCH

EXPLODED VIEW

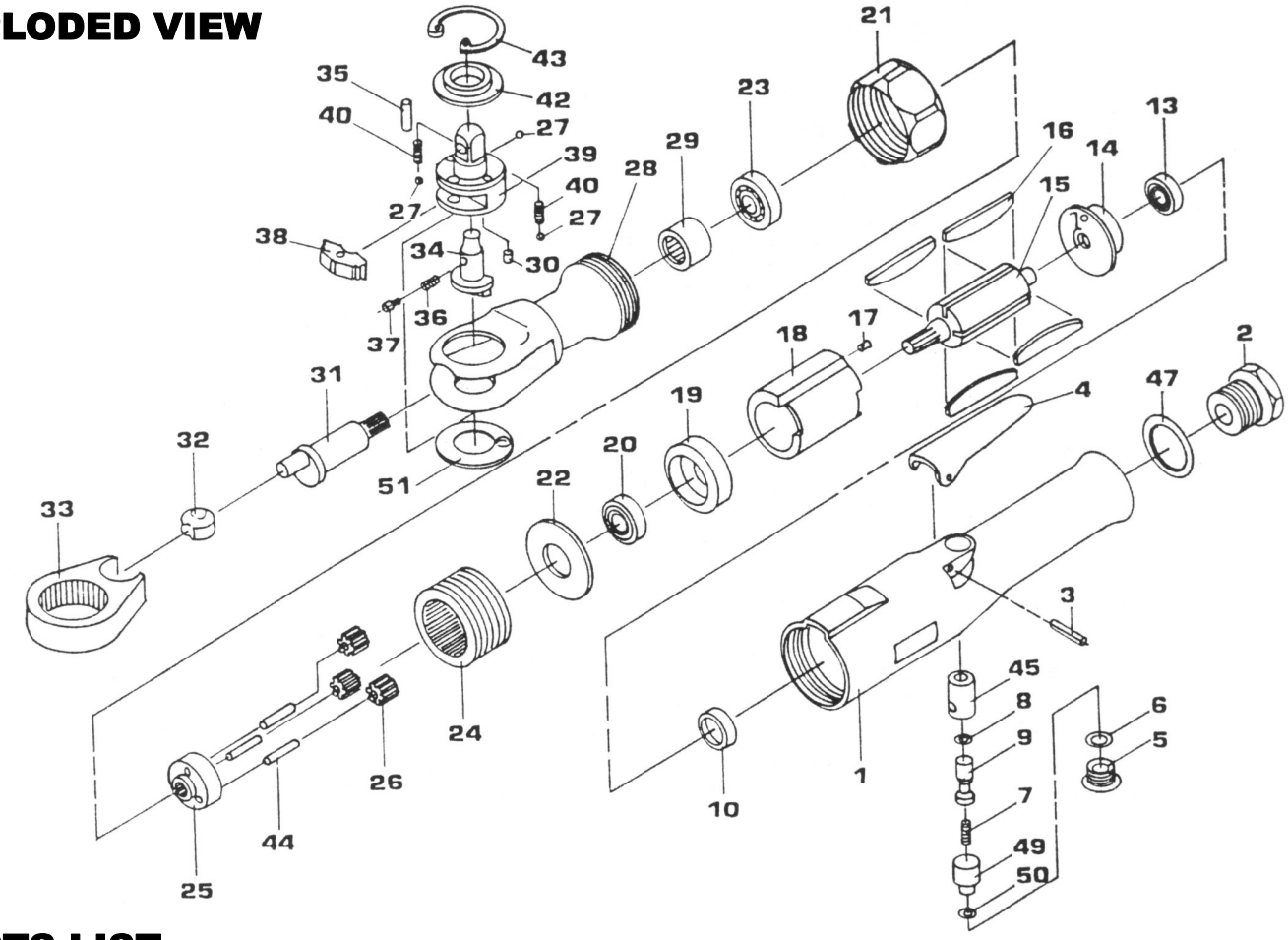

PARTS LIST – FOR REFERENCE ONLY

Index Number	Part Number	Description	Qty.
1	HD-12001	MOTOR HOUSING	1
2	HD-12002	INLET BUSHING	1
3	SP-25220	SPRING PIN	1
4	AR-38005	THROTTLE LEVER	1
5	VP-70041	VALVE SCREW	1
6	ORP-1001	O RING	1
7	VP-70037	VALVE SPRING	1
8	ORP-0060	O RING	1
9	VP-70037	VALVE STEM	1
10	VP-70011	BEARING CAP	1
13	BB-06082	BALL BEARING	1 *
14	HD-12014	REAR END PLATE	1
15	HD-12015	ROTOR	1
16	HD-12016	ROTOR BLADES	4 *
17	SP-30060	SPRING PIN	1
18	HD-12018	CYLINDER	1
19	HD-12019	FRONT END PLATE	1
20	BB-60002	BALL BEARING	1 *
21	HD-12021	CLAMP NUT	1
22	HD-12022	WASHER	1
23	BB-6000	BALL BEARING	1
24	HD-12024	INTERNAL GEAR	1
25	HD-12025	IDLER GEAR PLATE	1
26	HD-12026	IDLER GEAR	1
27	SB-006	STEEL BALL	1
28	HD-12028	RATCHET HOUSING	1
29	HD-12029	NEEDLE BEARING	1
30	SP-25060	SPRING PIN	1
31	HD-12031	CRANK SHAFT	1
32	HD-12032	DRIVE BUSHING	1
33	HD-12033	YOKE	1
34	HD-12034	REVERSE BUTTON	1
35	NR-60160	NEEDLE ROLLER	1
36	HD-10236	REVERSE SPRING	1
37	HD-12037	LOCK PIN	1
38	HD-10238	PAWL	1
39	HD-12039	RATCHET ANVIL	1
40	HD-12040	SPRING	2
42	HD-12042	THRUST WASHER	1
43	RTW-036	INTERNAL STOP RING	1
44	NR-50223	NEEDLE ROLLER	1
45	AP-70030	BUSHING	1
47	ORP-0180	O RING	1
49	AP-70034	AIR REGULATOR	1
50	ORP-0080	AIR REGULATOR	1
51	HD-12051	O RING	1

TECHNICAL DATA

	Max Air Pressure	Recommended Air Hose Size	RPM Free Speed	Max Air Flow CFM	Weight (lbs.)
1005	90 psi	3/8"	150	21	3.1

When ordering spare parts, please specify tool type, part number and description

EAGLE INDUSTRIES

10000 SE PINE, PORTLAND, OR 97216
503-254-1749 FAX 503-256-4026

FOOTNOTES

* Parts Available in Repair Kit 1005-RK*

REVISED 7/99