α ALPHA 50 (D) MC OIL-PULSE TOOLS

EXPLODED VIEW

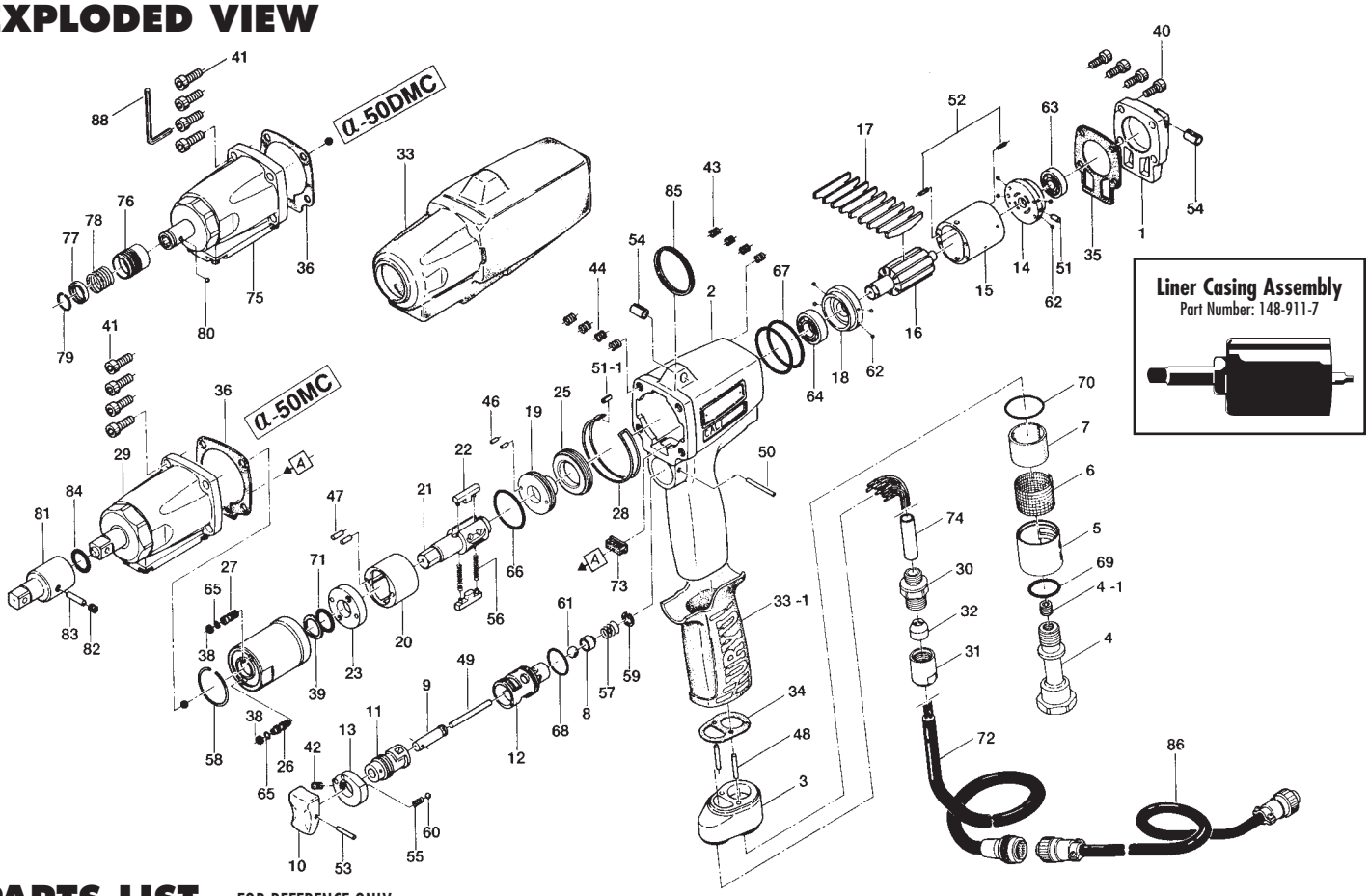

PARTS LIST — FOR REFERENCE ONLY

Index Number	Part Number	Description	Qty.
1	148-012-7	Head Cover	1
2	148-025-7	Casing	1
3	149-035-5	Casing Connector	1
4	148-091-9	Air Inlet Bushing	1
4-1	148-093-7	Air Inlet Bushing Screw	1
5	173-780-0	Exhaust Stack	1
6	173-042-0	Silencer	1
7	173-835-0	Filter	1
8	480-100-9	Valve	1
9	480-103-9	Valve Rod Bushing	1
10	148-107-7	Valve Lever	1
11	480-210-9	Reverse Valve	1
12	480-211-9	Reverse Valve Bushing	1
13	148-212-7	Reverse Lever	1
14	148-285-7	Rear Plate	1
15	148-286-7	Cylinder	1
16	148-287-7	Rotor	1
17	148-288-7	Blade	9
18	148-289-7	Front Plate	1
19	148-901-7	Rear Liner Plate	1
20	148-902-7	Liner	1
21	149-319-2	Anvil	1
22	177-440-5	Driving Blade	1
23	148-904-7	Front Liner Plate	1
24	148-905-7	Liner Casing	1
25	148-906-7	Liner Casing Setter	1
26	174-907-8	Relief Valve Spindle	1
27	178-742-0	Oil Plug	1
28	149-754-2	Clip Ring	1
29	850-470-5	Sensor Casing Assembly	1
30	149-079-5	Connector	1
31	149-018-5	Cap	1

Index Number	Part Number	Description	Qty.
32	149-562-6	Stopper	1
33	148-840-7	Handle Protector	1
33-1	150-842-5	Handle Cover	1
34	149-850-5	Handle Packing	1
35	148-853-7	Handle Cover Packing	1
36	149-867-2	Front Casing Packing	1
38	944-002-0	Supporting Ring (2.4 x 4.5 x 1)	2
39	944-214-0	Supporting Ring (12 x 15.9 x 1)	1
40	945-014-0	Allen Head Bolt (M4 x 14)	4
41	945-117-0	Allen Head Bolt (M5 x 16)	4
42	952-106-0	Allen Head Dog Point Screw (M6 x 6)	1
43	965-006-0	Heli-Sert (M4 x 1.5D)	4
44	965-011-0	Heli-Sert (M5 x 1.5D)	4
46	970-130-0	Pin (H) (2.45 x 4.5)	2
47	970-135-0	Pin (H) (2.45 x 11)	2
48	970-208-0	Pin (H) (3 x 10)	2
49	970-228-0	Pin (H) (3 x 28)	1
50	971-123-0	Pin (2 x 23)	1
51	973-005-0	Roll Pin (2 x 5)	1
51-1	973-007-0	Roll Pin (2 x 7)	1
52	973-008-0	Roll Pin (2 x 8)	2
53	973-012-0	Roll Pin (2 x 12)	1
54	973-340-0	Roll Pin (6 x 10)	2
55	976-006-0	Spring (3 x 5 x 0.4)	1
56	976-791-0	Spring (3.3 x 21 x 0.4) WPC	2
57	977-150-0	Cone Spring (6.8 x 8.5 x 8)	1
58	978-282-0	Snap Ring (28 x 1)	1
59	979-002-0	Inner Snap Ring (9)	1
60	981-002-0	Ball (1/8)	1
61	981-206-0	Ball (1/4) Black	1
62	981-045-0	Ball (1.5mm)	8
63	982-401-0	Ball Bearing (EE2)	1

Index Number	Part Number	Description	Qty.	
64	982-402-0	Ball Bearing (EE3)	1	
65	990-320-0	O-Ring (ARP568-003)	2	
66	990-327-0	O-Ring (JW1530-18)	1	
67	990-335-0	O-Ring (JW1530-25)	2	
68	990-912-0	O-Ring (SNS-14)	1	
69	990-916-0	O-Ring (SNS-18)	1	
70	990-921-0	O-Ring (SNS-22.4)	1	
71	990-152-0	O-Ring (P12)	1	
72	909-963-0	Joint Cable Assembly	1	
73	909-918-0	Double-Row Socket (DF11-12DC-2)	1	
74	909-738-0	Shrink Tube (6 x 40)	1	
75	850-476-1	Sensor Casing Assembly	1	■
76	011-351-1	Bit Sleeve (1/8)	1	■
77	011-352-1	Bit Spacer	1	■
78	976-327-0	Spring (13.5 x 11 x 0.9)	1	■
79	978-117-0	Snap Ring (11.7 x 1.0)	1	■
80	981-002-0	Ball (1/8)	1	■

ACCESSORIES

81	904-090-0	Extension Bar (3/8 x 45)	1
82	953-104-0	Allen Head Flat Point Screw (M4 x 4)	1
83	971-214-0	Pin (3 x 14)	1
84	990-011-0	O-Ring (P12)	1
85	004-790-2	Suspension Ring	1
86	909-921-0	Sensor Cable Assembly	1
88	939-105-0	Allen Wrench (4mm)	1

FOOTNOTES

■ = ALPHA 50DMC parts

Note: Liner Casing Assembly = 148-911-7

AIMCO also offers a complete line of standard & special adapters, bits, sockets and extensions.

When ordering spare parts, please specify tool type, part number and description.

AIMCO
10000 SE PINE, PORTLAND, OR 97216
503-254-6600 FAX 503-255-2615

REVISED 4/99