UL70 SERIES OIL-PULSE TOOLS

EXPLODED VIEW

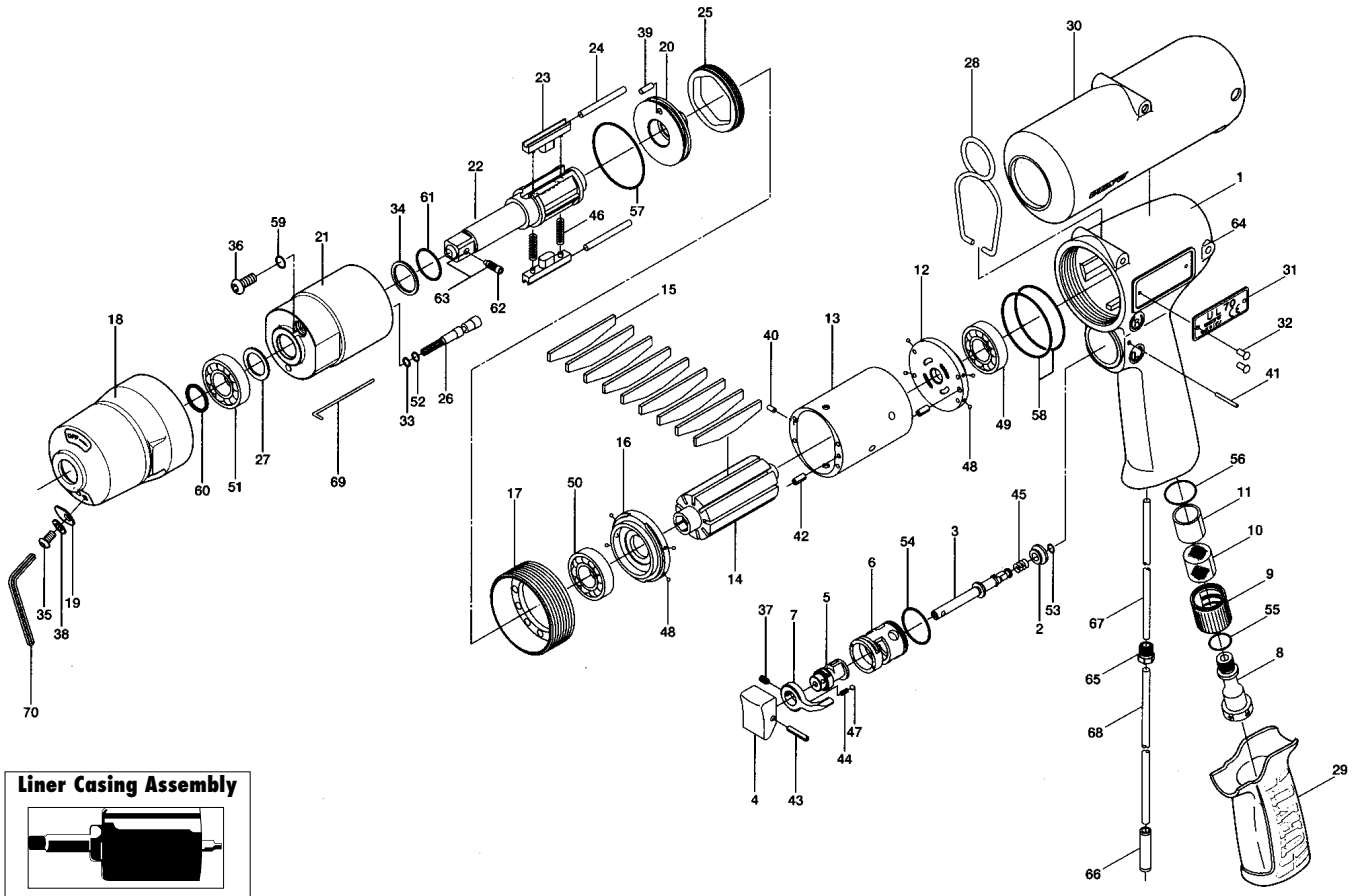

Liner Casing Assembly

Part # 891-469-1

PARTS LIST — FOR REFERENCE ONLY

Index Number	Part Number	Description	Qty.
01	143-025-8	HANDLE	1
02	147-100-2	VALVE	1
03	147-104-2	VALVE ROD	1
04	147-107-2	VALVE LEVER	1
05	147-210-2	REVERSE VALVE	1
06	147-211-2	REVERSE VALVE BUSHING	1
07	480-212-8	REVERSE LEVER	1
08	147-091-2	AIR INLET BUSHING	1
09	147-780-3	EXHAUST STACK	1
10	147-042-2	SILENCER	1
11	147-835-3	FILTER (K200)	1
12	143-285-8	REAR PLATE	1
13	143-286-8	CYLINDER	1
14	143-287-8	ROTOR	1
15	147-288-6	BLADE(PC)	9
16	143-289-8	FRONT PLATE	1
17	143-036-8	HAMMER CASING CONNECTOR	1
18	143-439-8	FRONT CASING	1
19	143-243-8	REGULATOR VALVE COVER	1
20	143-901-8	REAR LINER PLATE	1
21	143-902-8	LINER	1
22	143-319-8	ANVIL (OP-O)	1
23	147-440-6	DRIVING BLADE	2
24	147-974-6	ROLLER PIN (2.5X28)	2
25	143-906-8	LINER CASING COVER	1
26	143-970-8	RELIEF VALVE	1
27	178-327-9	ANVIL FRONT SPACER	1

Index Number	Part Number	Description	Qty.
28	174-790-0	SUSPENSION BALL	1
29	147-842-2	HANDLE COVER	1
30	143-840-8	CASING PROTECTOR	1
31	143-924-8	METAL TAG	1
32	930-205-0	SCREW (NO.0X2.6)	2
33	944-001-0	SUPPORTING RING (2.1X4X1)	1
34	944-212-0	SUPPORTING RING (12X16X1.5)	1
35	945-935-0	HEXAGON ROUND HEAD BOLT (M3X6)	1
36	945-942-0	HEXAGON ROUND HEAD BOLT (M4X6)	1
37	952-106-0	ALLEN HEAD DOG POINT SCREW (M4X6)	1
38	961-008-0	FLAT WASHER (3mm)	1
39	970-147-0	PIN (H) (2.5X5)	1
40	971-102-0	PIN (2X3.8)	1
41	971-123-0	PIN (2X23)	1
42	973-008-0	ROLL PIN (2X8)	2
43	973-014-0	ROLL PIN (2X14)	1
44	976-006-0	SPRING (3X5)	1
45	976-457-0	SPRING (7X12)(0.9)	1
46	976-788-0	SPRING 3.5X25(0.45)WPC	2
47	981-002-0	BALL (1/8)	1
48	981-045-0	BALL (1.5)	8
49	982-014-0	BALL BEARING (607)	1
50	982-902-0	BALL BEARING (6901)	1
51	982-922-0	BALL BEARING (6901ZZ)	1
52	990-320-0	O-RING (ARP568-003)	1
53	990-306-0	O-RING (ARP568-004)(H)	1

Index Number	Part Number	Description	Qty.
54	990-912-0	O-RING (SNS-14)	1
55	990-914-0	O-RING (SNS-16)	1
56	990-916-0	O-RING (SNS-18)	1
57	990-917-0	O-RING (SNS-24)	1
58	990-929-0	O-RING (SNS-36)	2
59	990-971-0	O-RING (SNS-3) (NOK)	1
60	990-012-0	O-RING (P12.5)	1
61	992-020-0	SU-RING(Q12)(NTN)	1
62	891-300-1	SOCKET PIN ASSEMBLY (3/8)	1
63	891-553-1	ANVIL (OP-P)	1
PARTS FOR (TM)-TYPE			
64	851-027-1	HANDLE	1
65	850-610-1	CONNECTING SCREW	1
66	933-250-0	ONE-TOUCH CONNECTOR (SLS-04)	1
67	935-240-0	NYLON TUBE (18NY)	1
68	935-350-0	POLYURETHANE HOSE (F1504)	1
ACCESSORIES			
69	939-091-0	ALLEN WRENCH (1.5MM)	1
70	939-107-0	ALLEN WRENCH (2MM)	1

AIMCO also offers a complete line of standard & special adapters, bits, sockets and extensions.

FOOTNOTES

When ordering spare parts, please specify tool type, part number and description.

10000 SE PINE, PORTLAND, OR 97216
503-254-6600 FAX 503-255-2615

REVISED 02/03