ULT60S(D) SERIES OIL-PULSE WRENCHES

EXPLODED VIEW

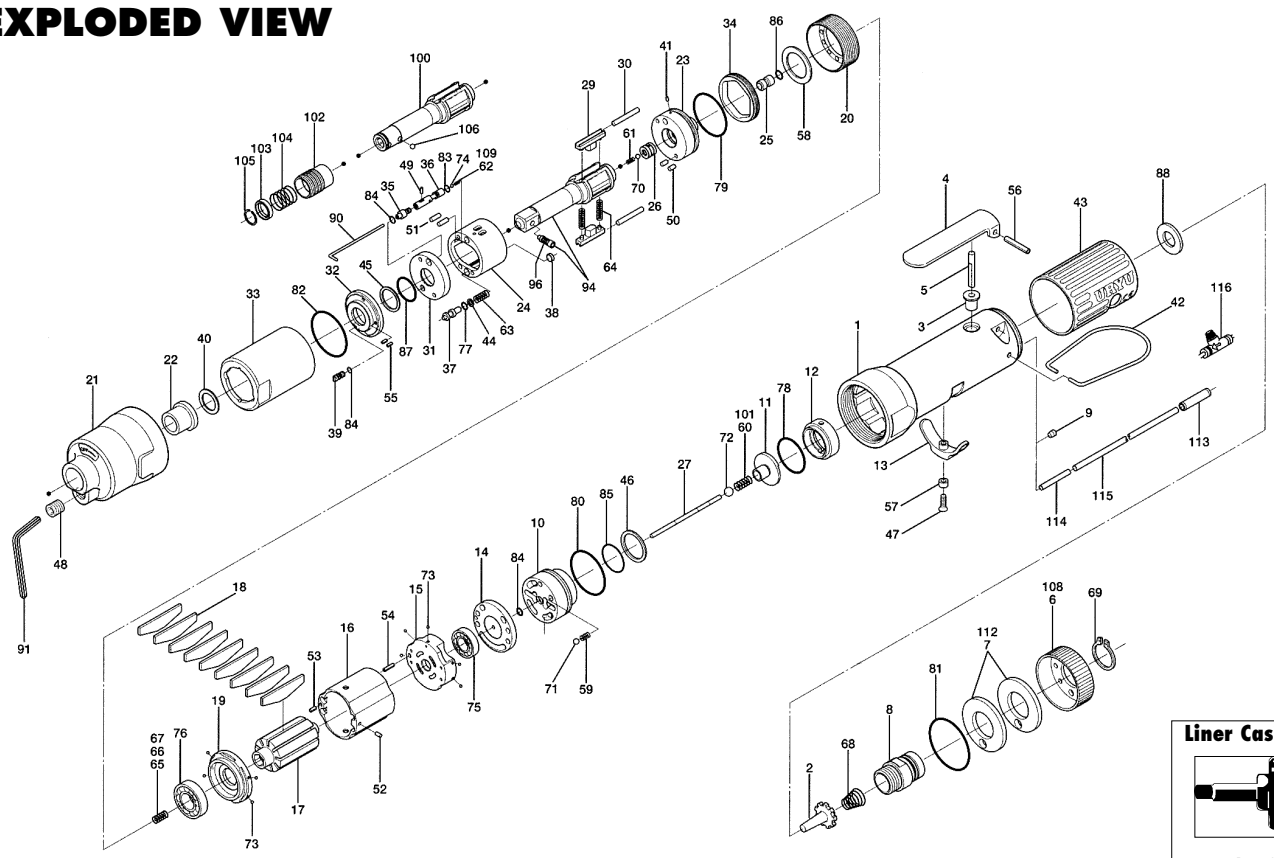

Liner Casing Assembly

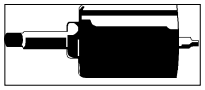

Part # 891-463-1

PARTS LIST — FOR REFERENCE ONLY

Index Number	Part Number	Description	Qty.
1	129-025-2	Casing	1
2	259-100-0	Valve	1
3	161-103-3	Valve Rod Bushing	1
4	196-107-7	Valve Lever	1
5	128-104-8	Valve Rod	1
6	128-782-8	Exhaust Cover (Red)	1
7	128-835-8	Filter (K200)	2
8	128-091-8	Air Inlet Bushing	1
9	147-064-6	Filler	1
10	128-253-8	Shut-Off Valve Bushing	1
11	145-254-6	Shut-Off Valve	1
12	129-684-2	Cushion Spacer (White)	1
13	161-212-3	Reverse Lever	1
14	128-291-8	Rear Plate Spacer	1
15	129-285-2	Rear Plate	1
16	129-286-2	Cylinder	1
17	145-287-6	Rotor	1
18	147-288-2	Blade (PC)	9
19	128-289-8	Front Plate	1
20	147-036-2	Hammer Casing Connector	1
21	145-439-7	Front Casing	1
22	190-328-6	Anvil Bushing	1
23	145-901-6	Rear Liner Plate	1
24	145-902-6	Liner	1
25	145-546-6	Piston	1
26	145-929-6	Check Valve Cover	1
27	129-130-2	Operating Rod (2.1x65)	1
28	145-319-6	Anvil	1
29	145-440-6	Driving Blade	2
30	145-974-6	Roller (2.5x26)	2
31	145-973-6	Liner Casing Spacer	1
32	145-904-6	Front Liner Plate	1
33	145-905-6	Liner Casing	1
34	145-906-6	Liner Casing Cover	1
35	145-907-6	Relief Valve Spindle	1
36	145-970-6	Relief Valve	1
37	145-972-6	Accumulator	1
38	145-908-7	Accumulator Cover	1
39	194-742-0	Oil Plug	1
40	145-327-6	Anvil Front Spacer	1
41	150-064-5	Plug	1
42	191-790-1	Suspension Ring	1
43	129-842-3	Casing Cover (Red)	1
44	944-002-0	Support Ring (2.6x4.5x1)	1
45	944-212-0	Support Ring (12x16x1.5)	1
46	944-216-0	Support Ring (14x20x1.85)	1
47	948-426-0	Allen Head Dog Point Screw (M3x12)	1
48	966-099-0	Allen Head Plug (NPT1/16) GDL	1
49	970-013-0	Pin (H) (1.5x4)	1
50	970-130-0	Pin (H) (2.45x4.5)	2
51	970-131-0	Pin (H) (2.45x9.5)	2
52	971-102-0	Pin (2x3.8)	1
53	973-008-0	Roll Pin (2x8)	1
54	973-018-0	Roll Pin (2x18)	1
55	973-040-0	Roll Pin (1.5x5)	2
56	973-122-0	Roll Pin (3x22)	1
57	975-004-0	Spacer (5.5x3.1 x2.7)	1
58	975-752-0	Adjusting Spacer (15x10xt)	1
59	976-006-0	Spring (3x5x0.4)	1
60	976-687-0	Spring (4.3x10x0.45)	1
61	976-653-0	Spring (2.4x5x0.26)	1
62	976-668-0	Spring (2.8x7.8x0.4)	1
63	976-665-0	Spring (4.3x19x0.55)	1
64	976-792-0	Spring (3.5x21x0.45) WPC	2
65	976-650-0	Spring (3.3x16x0.45) Standard	1
66	976-661-0	Spring (3.3x17x0.4) Weak(Black)	1
67	976-662-0	Spring (3.3x17x0.35) Strong (Yellow)	1
68	977-227-0	Cone Spring (9x12x25x0.8)	1
69	979-358-0	Snap Ring (ISTW-17)	1
70	981-001-0	Ball (3/32)	1
71	981-002-0	Ball (1/8)	1
72	981-003-0	Ball (5/32)	1
73	981-045-0	Ball (1.5mm)	9
74	981-150-0	Ball (3mm)	1
75	982-014-0	Ball Bearing (607)	1
76	982-902-0	Ball Bearing (6901)	1
77	990-320-0	O-Ring (ARP568-003)	1
78	990-327-0	O-Ring (JW1530-18)	1
79	990-329-0	O-Ring (JW1530-19)	1
80	990-331-0	O-Ring (JW1530-21)	1
81	990-603-0	O-Ring (28.5x1.3)	1
82	990-605-0	O-Ring (25x1.45)	1
83	990-621-0	O-Ring (3.8x1.8x1.0)	1
84	990-900-0	O-Ring (SNS-2)	3
85	990-914-0	O-Ring (SNS-16)	1
86	990-305-0	O-Ring (ARP568-003) KS	1
87	992-020-0	SU-Ring (Q12/NTN)	1
88	996-423-0	Urethane Packing (16x10x2)	1
94	891-552-1	Anvil Assembly (OP-P)	1
96	891-300-1	Socket Pin Assembly	1
PARTS FOR ULT60SD			
100	145-350-7	Driver Anvil	1
101	976-647-0	Spring (4.3x9x0.45)	1
102	011-351-1	Bit Sleeve (1/8)	1
103	011-352-1	Bit Spacer	1
104	976-327-0	Spring (13.5x11x0.9)	1
105	978-117-0	Snap Ring (11.7x1)	1
106	981-002-0	Ball (1/8)	1
PARTS FOR ULT60SL & DSL			
108	129-782-0	Exhaust Cover (Blue)	1
109	976-673-0	Spring (2.8x7.8x0.4)	1
PARTS FOR TM-TYPE			
112	851-053-1	Filter (K200)	2
113	909-442-0	Quick Exhaust (AQ240F-04-00)	1
114	935-240-0	Nylon Tube (NPT1/4x3/8)	1
115	935-350-0	Polyurethane Hose (F-1504)	1
ACCESSORIES			
90	939-091-0	Allen Wrench (1.5)	1
91	939-105-0	Allen Wrench (4)	1
116	909-449-0	Speed Controller (AS1001F-04)	1

When ordering spare parts, please specify tool type, part number and description.

AIMCO
10000 SE PINE, PORTLAND, OR 97216
503-254-6600 FAX 503-255-2615

FOOTNOTES

AIMCO also offers a complete line of standard & special adapters, bits, sockets and extensions.