ULT90 SERIES OIL-PULSE WRENCH

EXPLODED VIEW

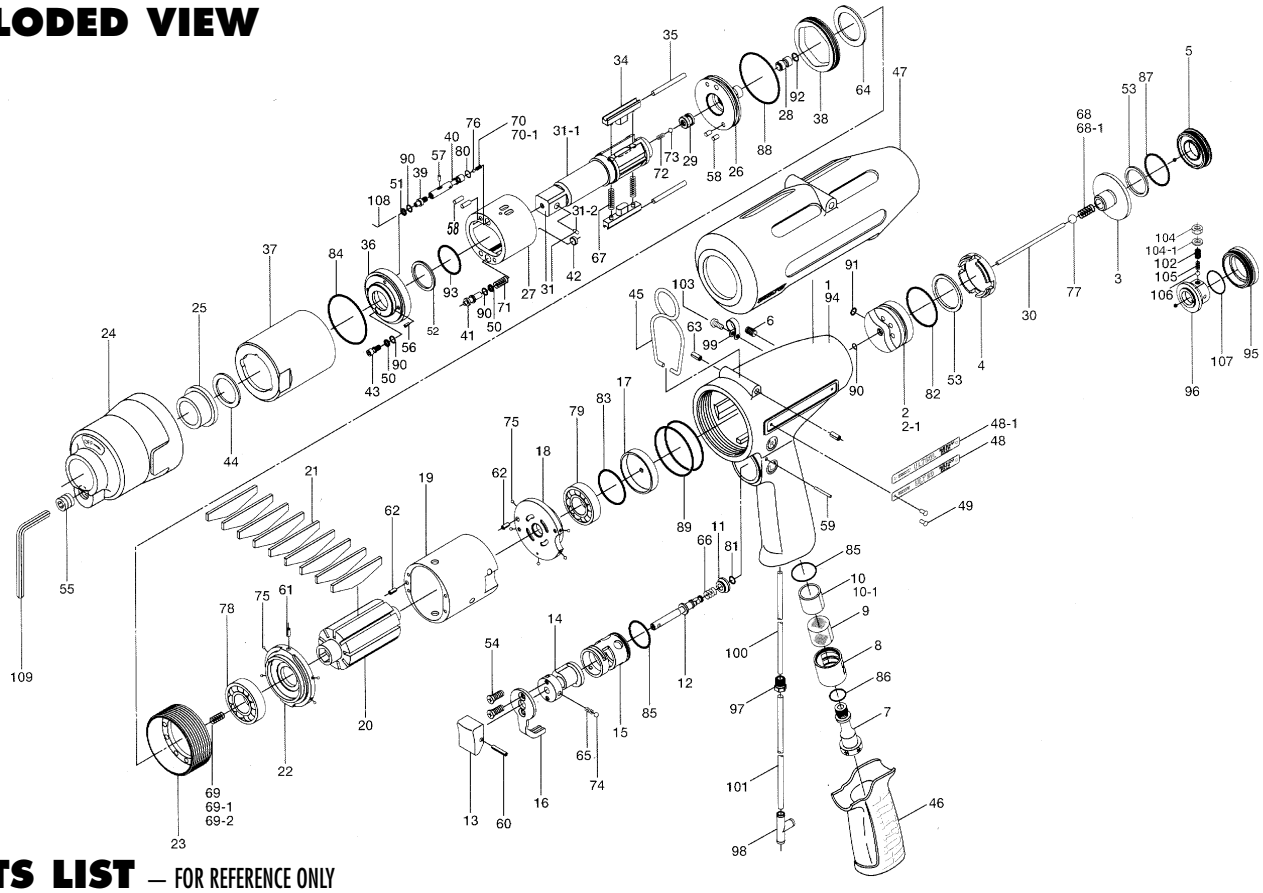

PARTS LIST — FOR REFERENCE ONLY

Index Number	Part Number	Description	Qty.
1	147-025-8	HANDLE	1
2	147-253-8	SHUT-OFF VALVE BUSHING	1
2-1	147-253-9	SHUT-OFF VALVE BUSHING FOR ULT90L	1
3	147-254-9	SHUT-OFF VALVE	1
4	147-684-8	CUSHION SPACER	1
5	147-019-8	VALVE COVER	1
6	150-108-5	VALVE PLUG	1
7	147-091-8	AIR INLET BUSHING	1
8	147-780-9	EXHAUST DEFLECTOR	1
9	147-042-8	SILENCER	1
10	147-835-8	FILTER (K100)	1
10-1	147-835-9	FILTER (K200) FOR ULT90L	1
11	147-100-8	VALVE	1
12	147-104-8	VALVE ROD	1
13	147-107-2	VALVE LEVER	1
14	147-210-8	REVERSE VALVE	1
15	147-211-8	REVERSE VALVE BUSHING	1
16	147-212-8	REVERSE LEVER	1
17	147-291-8	REAR PLATE SPACER	1
18	147-285-8	REAR PLATE	1
19	147-286-8	CYLINDER	1
20	147-287-8	ROTOR	1
21	147-288-8	BLADE (PC)	9
22	147-289-8	FRONT PLATE	1
23	147-036-8	HAMMER CASING CONNECTOR	1
24	147-439-8	FRONT CASING	1
25	147-328-8	ANVIL BUSHING	1
26	147-901-8	REAR LINER PLATE	1
27	147-902-8	LINER	1
28	145-546-6	PISTON	1
29	145-929-6	CHECK VALVE COVER	1
30	147-130-8	PISTON ROD (2.1 X 64..25 +/- .25)	1
31	981-551-1	ANVIL CP (P)	1
31-1	147-319-8	ANVIL (O)	1
31-2	891-304-1	SOCKET PIN ASSEMBLY (1/2)	1
34	147-440-9	DRIVING BLADE	2
35	147-974-8	ROLLER (2.5X30)	2
36	147-904-8	FRONT LINER PLATE	1
37	147-905-8	LINER CASING	1
38	147-906-8	LINER CASING SETTER	1
39	174-907-2	RELIEF VALVE SPINDLE	1
40	147-970-8	RELIEF VALVE	1
41	147-972-8	ACCUMULATOR	1
42	147-908-9	ACCUMULATOR COVER	1
43	194-742-3	OIL PLUG	1
44	147-327-8	ANVIL FRONT SPACER	1
45	174-790-0	SUSPENSION RING	1
46	147-842-2	HANDLE COVER	1
47	147-840-9	BODY JACKET	1
48	147-942-8	NAME PLATE	1
48-1	147-924-9	NAME PLATE FOR ULT90L	1
49	930-205-0	PIN (NO.0 X 2.6)	2
50	944-003-0	SUPPORTING RING (3.0X5.0X1)	2
51	944-203-0	SUPPORTING RING (3.1X5X1)	1
52	944-215-0	SUPPORTING RING (16X19.9X1.5)	1
53	944-222-0	SUPPORTING RING (20 X 27.5 X 1.5)	2
54	948-423-0	ALLEN FLUSH HEAD SCREW (M3X6)	2
55	966-099-0	ALLEN HEAD PLUG (NPT 1/16)	1
56	969-449-0	PIN (G) (3X6)	1
57	970-091-0	PIN (H) (2X4.5)	1
58	970-205-0	PIN (H) (3X7)	4
59	971-125-0	PIN (2X25)	1
60	973-014-0	ROLL PIN (2X14)	1
61	973-006-0	ROLL PIN (2X6)	1
62	973-068-0	ROLL PIN (2.5X8)	2
63	973-308-0	ROLL PIN (5X8)	2
64	975-780-0	ADJUSTING SPACER (21X13XT)	1
65	976-006-0	SPRING (3X5)	1
66	976-643-0	SPRING (7.5 X 9.7)(0.9)	1
67	976-794-0	SPRING (3.8X33)(0.5)WPC	2
68	976-036-0	CONE SPRING (3.6X4.8X8.4)(0.55)WPC	1
68-1	977-037-0	CONE SPRING (3.5X4.7X8.3)(0.5)WPC FOR ULT90L	1
69	976-650-0	SPRING (3.3X16)(0.45)[STANDARD]	1
69-1	976-688-0	SPRING (3.3 X 17.5)(0.4)SWPA[WEAK]	1
69-2	976-662-0	SPRING (3.3 X 18)(0.45)[STRONGER]	1
70	976-652-0	SPRING 2.9X7.9(0.45)	1
70-1	976-656-0	SPRING 2.9X8.5(0.4)FOR ULT90L	1
71	976-642-0	SPRING 4.8X24.5(0.6)	1
72	976-645-0	SPRING 2.4X5(0.3)SWPA	1
73	981-001-0	BALL (3/32)	1
74	981-002-0	BALL (1/8)	1
75	981-045-0	BALL (1.5)	9
76	981-150-0	BALL (3mm)	1
77	981-245-0	BALL (4.5mm)	1
78	982-903-0	BALL BEARING (6902)	1
79	982-949-0	BALL BEARING (16001)	1
80	990-320-0	O-RING (ARP568-003)	1
81	990-306-0	O-RING (ARP568-004)(H)	1
82	990-331-0	O-RING (JW1530-21)	1
83	990-334-0	O-RING (JW1530-24)	1
84	990-337-0	O-RING (JW1530-27)	1
85	990-914-0	O-RING (SNS-16)	2
86	990-919-0	O-RING (SNS-22)	1
87	990-923-0	O-RING (SNS-26)	1
88	990-924-0	O-RING (SNS-30)	1
89	990-932-0	O-RING (SNS-42)	2
90	990-970-0	O-RING (SNS-2)	4
91	990-971-0	O-RING (SNS-3)	1
92	990-305-0	O-RING (ARP568-003)	1
93	992-021-0	O-RING(SU-Q16)	1
PARTS FOR (TM)-TYPE			
94	851-010-1	HANDLE	1
95	851-011-1	VALVE COVER	1
96	851-012-1	VALVE SPACER	1
97	850-610-1	CONNECTING SCREW	1
98	909-442-0	QUICK EXHAUST (AQ240F-04-00)	1
99	929-050-0	COUPLING	1
100	935-240-0	NYLON TUBE (18NY)	1
101	935-350-0	POLYURETHANE HOSE (F1504)	1
102	953-108-0	ALLEN HEAD FLAT POINT SCREW (M4X8)	1
103	957-006-0	CROSS PAN HEAD SCREW (M3X6)	1
104	960-030-0	HEXAGON NUT (3-M4)	1
104-1	962-006-0	SPRING WASHER (2-45)	1
105	976-279-0	SPRING (2.5X8)	1
106	981-225-0	BALL (2.5mm)	1
107	990-920-0	O-RING (SNS-25)	1
ACCESSORIES			
108	939-091-0	ALLEN WRENCH (1.5)	1
109	939-105-0	ALLEN WRENCH (4)	1

When ordering spare parts, please specify tool type, part number and description.

AIMCO
10000 SE PINE, PORTLAND, OR 97216
503-254-6600 FAX 503-255-2615

FOOTNOTES

AIMCO also offers a complete line of standard & special adapters, bits, sockets and extensions.

REVISED 11/03