UX-900 OIL-PULSE TOOLS

EXPLODED VIEW

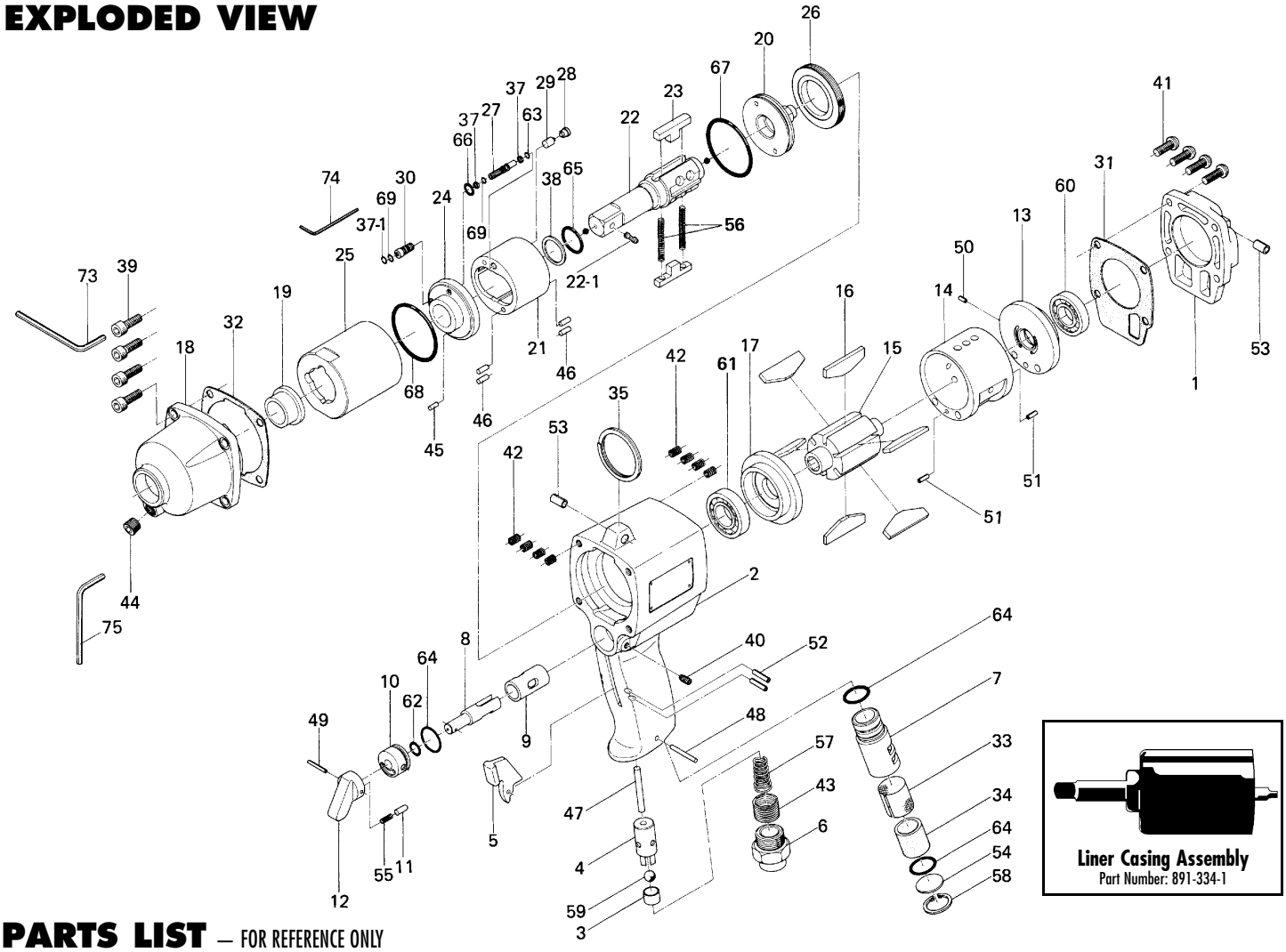

Liner Casing Assembly
Part Number: 891-334-1

PARTS LIST — FOR REFERENCE ONLY

Index Number	Part Number	Description	Qty.
1	194-012-3	Head Cover	1
2	194-025-3	Handle	1
3	188-100-1	Valve	1
4	063-102-3	Valve Bushing	1
5	187-107-1	Valve Lever	1
6	185-091-7	Air Inlet Bushing	1
7	194-780-4	Exhaust Stack	1
8	187-210-1	Reverse Valve	1
9	185-211-1	Reverse Valve Bushing	1
10	187-222-1	Reverse Valve Setter	1
11	054-220-1	Reverse Lever Notch	1
12	023-212-4	Reverse Lever	1
13	194-285-3	Rear Plate	1
14	194-286-3	Cylinder	1
15	194-287-3	Rotor	1
16	168-288-6	Blade (PC)	6
17	194-289-3	Front Plate	1
18	194-439-3	Front Casing	1
19	188-328-2	Anvil Bushing	1
20	194-901-3	Rear Liner Plate	1
21	194-902-3	Liner	1
22	891-311-1	Anvil (OP-P)	1
22-1	891-304-1	Socket Retainer Pin Assembly	1
23	194-440-3	Driving Blade	2
24	194-904-3	Front Liner Plate	1
25	194-905-3	Liner Casing	1
26	194-906-3	Liner Casing Setter	1

Index Number	Part Number	Description	Qty.
27	194-907-3	Relief Valve Spindle	1
28	194-969-2	Relief Valve Plug	1
29	194-970-2	Relief Valve	1
30	194-742-3	Oil Plug	1
31	194-853-3	Heed Cover Pecking	1
32	194-867-3	Front Casing Packing	1
33	194-042-4	Silencer	1
34	194-835-4	Filter	1
35	004-790-2	Suspension Ring	1
37	944-002-0	Supporter Ring (2.6 x 4.5 x 1)	2
37-1	944-003-0	Supporter Ring (3 x 5 x 1)	1
38	944-215-0	Supporter Ring (16 x 19.9 x 1.5)	1
39	945-117-0	Allen Head Bolt (M5 x 16)	4
40	952-108-0	Allen Head Dog Point Screw (M4 x 8)	1
41	945-954-0	Hexagon Round Head Bolt (M5 x 16)	4
42	965-011-0	Heli-Sert (M5 x 1.5D)	8
43	965-073-0	Heli-Sert (UNF5/8 x N6)	1
44	966-100-0	Allen Head Plug (PT1/8)	1
45	969-450-0	Pin (G) (3 x 8)	1
46	970-206-0	Pin (H) (3 x 8)	4
47	970-337-0	Pin (H) (4 x 36)	1
48	971-163-0	Pin (2.5 x 23)	1
49	973-016-0	Roll Pin (2 x 16)	1
50	973-066-0	Roll Pin (2.5 x 6)	1
51	973-108-0	Roll Pin (3 x 8)	2
52	973-114-0	Roll Pin (3 x 14)	2
53	973-340-0	Roll Pin (6 x 10)	2

Index Number	Part Number	Description	Qty.
54	975-598-0	Round Plate (18 x 1)	1
55	976-025-0	Spring (3 x 8.5)	1
56	976-794-0	Spring (3.8 x 33 x 0.5) WPC	2
57	977-175-0	Cone Spring (7.5 x 10.3 x 22)	1
58	979-011-0	Inner Snap Ring (18)	1
59	981-208-0	Ball (5/16)	1
60	982-403-0	Ball Bearing (EE-4)	1
61	982-950-0	Ball Bearing (16002)	1
62	990-205-0	O-Ring (JW1516-5)	1
63	990-320-0	O-Ring (ARP568-003)	1
64	990-914-0	O-Ring (SNS-16)	3
65	990-156-0	O-Ring (P-16) (NTN)	1
66	990-973-0	O-Ring (SNS-5) (NOK)	1
67	990-607-0	O-Ring (34 x 2.3)	1
68	990-338-0	O-Ring (JW1530-28)	1
69	990-900-0	O-Ring (SNS-2)	2

ACCESSORIES

73	939-105-0	Allen Wrench (4mm)	1
74	939-109-0	Allen Wrench (2mm) (64 x 64)	1
75	939-104-0	Allen Wrench (5mm)	1

AIMCO also offers a complete line of standard & special adapters, bits, sockets and extensions.

FOOTNOTES

When ordering spare parts, please specify tool type, part number and description.

AIMCO
10000 SE PINE, PORTLAND, OR 97216
503-254-6600 FAX 503-255-2615