UX-800 & UX-ST800 OIL-PULSE TOOLS

EXPLODED VIEW

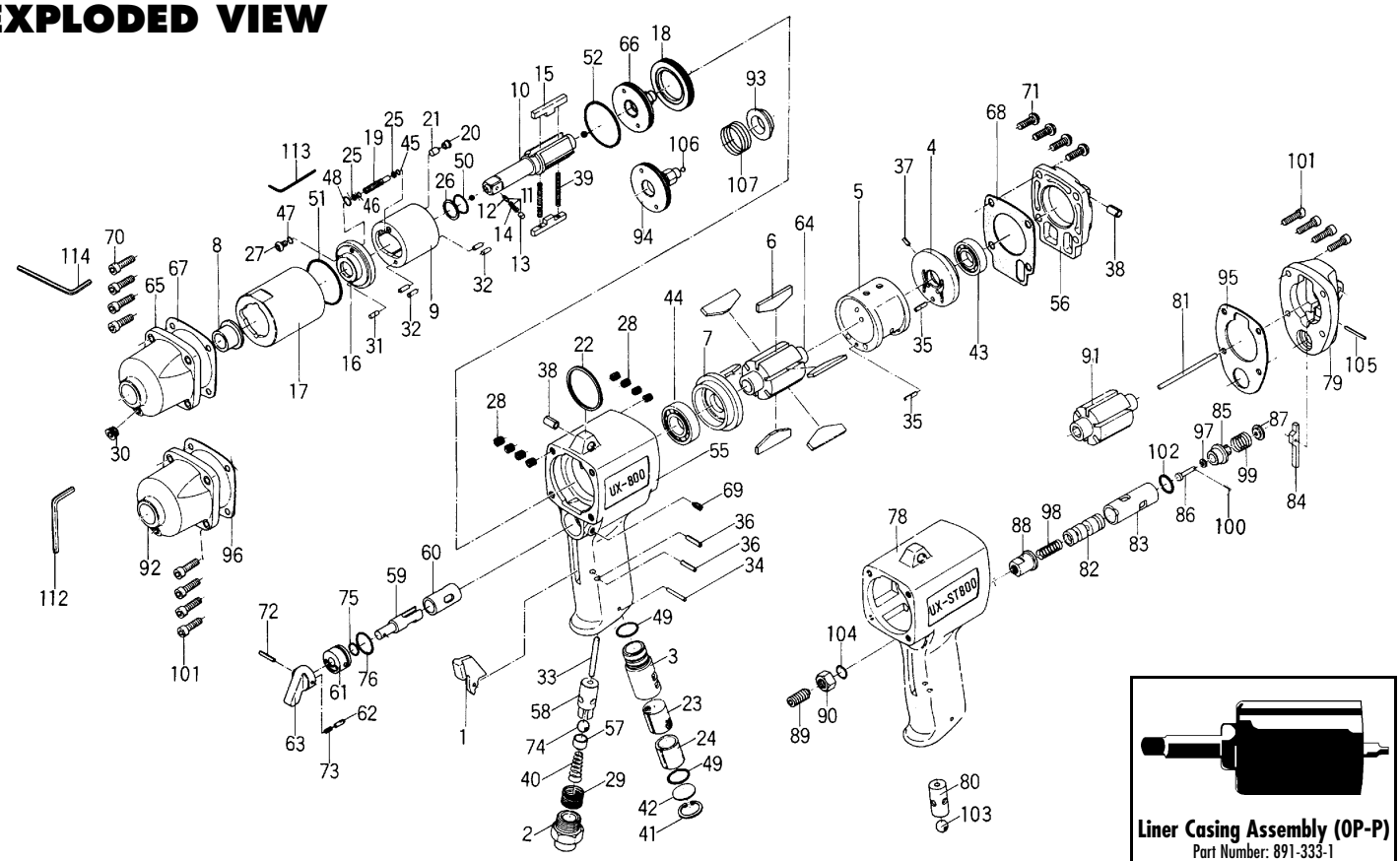

Liner Casing Assembly (OP-P)
Part Number: 891-333-1

PARTS LIST — FOR REFERENCE ONLY

Index Number	Part Number	Description	Qty.		
1	187-107-1	Valve Lever	1		
2	185-091-7	Air Inlet Bushing	1		
3	194-780-4	Exhaust Stack	1		
3-1	194-781-2	Exhaust Stack Bushing	1		
4	026-285-7	Rear Plate	1		
5	026-286-7	Cylinder	1		
6	167-288-6	Blade (PC)	6		
7	194-289-2	Front Plate	1		
8	185-328-2	Anvil Bushing	1		
9	194-902-2	Liner	1		
10	891-310-1	Anvil (OP-P)	1		
11	891-300-1	Socket Retainer Pin Assembly	1		
12	891-301-1	Socket Retainer Pin	1		
13	891-302-1	Bushing	1		
14	976-245-0	Spring (2.6 x 5.5 x 0.3)	1		
15	194-440-2	Driving Blade	2		
16	194-904-2	Front Liner plate	1		
17	194-905-2	Liner Casing	1		
18	194-906-2	Liner Casing Cover	1		
19	194-907-2	Relief Valve Spindle	1		
20	194-969-2	Relief Valve Plug	1		
21	194-970-2	Relief Valve	1		
22	004-790-2	Suspension Ring	1		
23	194-042-4	Silencer	1		
24	611-780-4	Filter	1		
25	944-002-0	Supporter Ring (2.6 x 4.5 x 1)	2		
26	944-214-0	Supporter Ring (12 x 15.9 x 1.5)	1		
27	945-942-0	Hexagon Round Head Bolt (M4 x 6)	1		
28	965-011-0	Heli-Sert (M5 x 1.5D)	8		
29	965-073-0	Heli-Sert (UNF5/8 x N6)	1		
30	966-100-0	Allen Head Plug (PT1/8)	1		
31	969-450-0	Pin (G) (3 x 8)	1		
32	970-206-0	Pin (H) (3 x 8)	4		
33	970-337-0	Pin (H) (4 x 36)	1		
34	971-162-0	Pin (2.5 x 22)	1		
35	973-110-0	Roll Pin (3 x 10)	2		
36	973-114-0	Roll Pin (3 x 14)	2		
37	980-008-0	Round Head Notch (2.4)	1		
38	973-340-0	Roll Pin (6 x 10)	2		
39	976-793-0	Spring (3.7 x 30) WPC	2		
40	977-175-0	Cone Spring (7.5 x 10.3 x 22)	1		
41	979-318-0	Inner Snap Ring (IRTW18)	1		
42	975-598-0	Round Plate (18 x 1)	1		
43	982-403-0	Ball Bearing (EE-4)	1		
44	982-950-0	Ball Bearing (16002)	1		
45	990-320-0	O-Ring (ARP568-003)	1		
46	990-900-0	O-Ring (SNS-2)	1		
47	990-971-0	O-Ring (SNS-3)	1		
48	990-973-0	O-Ring (SNS-5) (NOK)	1		
49	990-914-0	O-Ring (SNS-16)	2		
50	990-152-0	O-Ring (P-12) (NTN)	1		
51	990-337-0	O-Ring (JW1530-27)	1		
52	990-924-0	O-Ring (SNS-30)	1		
55	194-025-2	Handle	1	▼	
56	194-012-2	Handle Cover	1	▼	
57	186-100-1	Valve	1	▼	
58	063-102-3	Valve Bushing	1	▼	
59	187-210-1	Reverse Valve	1	▼	
60	185-211-1	Reverse Valve Bushing	1	▼	
61	187-222-1	Reverse Valve Setter	1	▼	
62	054-220-1	Reverse Valve Notch	1	▼	
63	023-212-4	Reverse Lever	1	▼	
64	194-287-2	Rotor	1	▼	
65	194-439-2	Front Casing	1	▼	
66	194-901-2	Rear Liner Plate	1	▼	
67	194-853-2	Head Cover Packing	1	▼	
68	194-867-2	Front Casing Packing	1	▼	
69	952-108-0	Allen Head Dog Point Screw (M4 x 8)	1	▼	
70	945-117-0	Allen Head Bolt (M5 x 16)	4	▼	
71	945-955-0	Hexagon Round Head Bolt (M5 x 18)	4	▼	
72	973-016-0	Roll Pin (2 x 16)	1	▼	
73	976-025-0	Spring (3 x 8.5)	1	▼	
74	981-208-0	Ball (5/16)	1	▼	
75	990-205-0	O-Ring (JW1516-5)	1	▼	
76	990-914-0	O-Ring (SNS-16)	1	▼	
78	183-025-2	Handle	1		❍
79	183-012-2	Head Cover	1		❍
80	063-102-1	Valve Bushing	1		❍
81	183-130-2	Piston Rod	1		❍
82	021-210-1	Reverse Valve	1		❍
83	183-211-2	Reverse Valve Bushing	1		❍
84	021-212-1	Reverse Lever	1		❍
85	021-225-1	Subsidiary Valve Body	1		❍
86	021-226-1	Subsidiary Valve	1		❍
87	021-227-1	Subsidiary Valve Spring Retainer	1		❍
88	021-255-1	Regulator Barrel	1		❍
89	183-256-2	Regulator Spindle	1		❍
90	183-269-2	Regulator Spindle Nut	1		❍
91	183-287-2	Rotor	1		❍
92	183-439-2	Front Casing	1		❍
93	183-164-2	Spring Retainer	1		❍
94	183-901-2	Liner Rear Plate	1		❍
95	183-853-2	Head Cover Packing	1		❍
96	185-867-7	Front Casing Packing	1		❍
97	975-077-0	Spacer (16.5 x 13 x 0.8)	1		❍
98	976-130-0	Spring (6.5 x 23 x 0.8)	1		❍
99	976-299-0	Spring (12 x15 x 1.0)	1		❍
100	970-008-0	Pin (H) (1 x 5.8)	1		❍
101	945-012-0	Allen Head Bolt (M4 x 12)	8		❍
102	990-011-0	O-Ring (P12)	1		❍
103	981-210-0	Ball (Black) (3/8)	1		❍
104	990-906-0	O-Ring (SNS-8)	1		❍
105	970-225-0	Pin (H) (3 x 25)	1		❍
106	981-002-0	Ball (1/8)	1		❍

ACCESSORIES

Index Number	Part Number	Description	Qty.	
107	976-566-0	Spring (24 x 20 x 1.2)	1	❍
112	939-104-0	Allen Wrench (5mm)	1	
113	939-109-0	Allen Wrench (2mm)	1	
114	939-105-0	Allen Wrench (4mm)	1	

AIMCO also offers a complete line of standard & special adapters, bits, sockets and extensions.

FOOTNOTES

▼ = Parts for UX-800
❍ = Parts for UX-ST800

When ordering spare parts, please specify tool type, part number and description.

AIMCO
10000 SE PINE, PORTLAND, OR 97216
503-254-6600 FAX 503-255-2615

REVISED 5/01